409 Series

8-inch Premium High Performance Ceiling Loudspeakers

COMMERCIAL

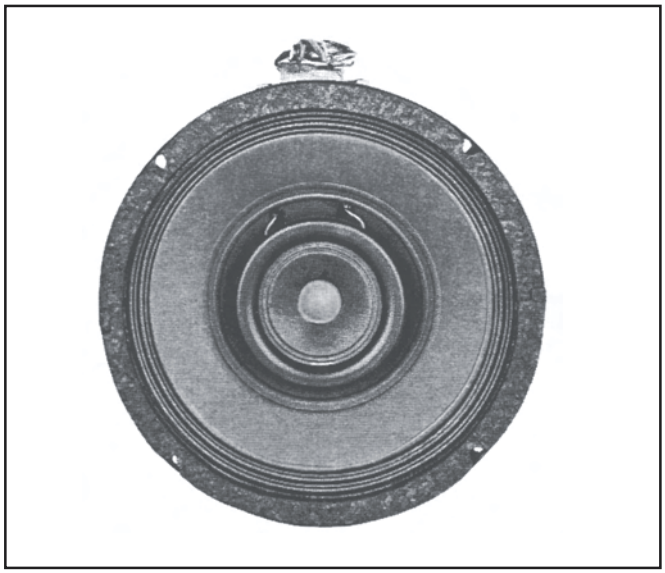

General Product Description

The Electro-Voice® 409 series loudspeaker systems are two-way loudspeakers with 8-inch low-frequency cones and high temperature voice-coil assemblies coaxially mounted with wide-dispersion cone tweeters. The dual magnet construction allows each speaker to be structurally, magnetically, electrically and mechanically independent of the other. The 409 series utilize a single section crossover network, centered at 2500 Hz, providing 6 dB of attenuation for each element outside the operating range.

The 409-8E is an 8 ohm, 32 watt speaker. The 409-ST (with 15700 transformer) and the 409-4T (with 15704 transformer) both offer a selection of 0.5, 1, 2 and 4W. The 409-8T (with 15708 transformer) offers a selection of 1, 2, 4 and 8W. The 409-16T (with 15716 transformer) offers 2, 4, 8 and 16W and the 409-32T (with 15732 transformer) offers a 4, 8, 16, 32W selection.

Architects' and Engineers' Specifications

409 Series Loudspeakers. The loudspeaker shall have an 8-inch low-frequency cone and a high temperature voice coil assembly coaxially mounted with a wide dispersion cone tweeter. The loudspeaker shall meet the following criteria. AES power rating shall be 32 watts of band limited pink noise (85 Hz to 18 kHz, 6 dB crest factor). Frequency response, uniform from 85 Hz to 18 kHz. Pressure sensitivity, 97 dB SPL at 1 meter (95 dB at 4 feet) on axis with one watt of band-limited pink noise from f_3 kHz (ref. 20 uPa). Minimum impedance, 6.0 ohms. The loudspeaker shall be 8.13 in (20.6 diameter and in (_cm) deep and shall weigh lbs (_ kg). For dimensions see next page.

The loudspeakers shall be EV (Electro-Voice®) models 409-8E, 409-ST (with 15700 transformer), 409-4T (with 15704 transformer), 409-8T (with 15708 transformer), 409-16T (with 15716 transformer) and the 409-32T (with 15732 transformer).

Specifications:

Power Rating: ..... 32 watts, 85 Hz - 18kHz, AES method

Frequency Response: ..... 85 - 18 kHz

Pressure Sensitivity: ..... 97 dB SPL

Measured at one meter on axis with 1 watt input of pink noise, band-limited from 500 - 3000 Hz (Ref.: 20 µPa)

Maximum SPL: ..... 112 dB for 32W @ 1M

Impedance:

Minimum ..... 6 ohms

Nominal ..... 8 ohms

Components:

8-inch, high-efficiency, low frequency driver with a coaxially mounted 2.5 inch cone tweeter.

Crossover Network:

Two-way at 2500 Hz with 6 dB per octave tweeter protection

Input Terminals:

Speaker: ..... 0.212 in. push-on type connectors

Transformer: ..... Pigtails

Mounting Data:

Baffle Opening:

96.8 mm (3.812 in.) diameter (rear mounted)

104.8 mm (4.125 in.) diameter (front mounted)

Mounting Bolt Centers: ..... 4 equally spaced slots 90° apart on 120.7 mm (4.75 in.) diameter circle

Dimensions: ..... Diameter: 206.5 mm (8.13 in.)

	Depth	Net Weight	Shipping Weight
409-8E	83 mm (3.25 in.)	2.8 lbs (1.3 kg)	3.3 lbs (1.5 kg)
409-ST	98 mm (3.86 in.)	3.1 lbs (1.4 kg)	3.6 lbs (1.6 kg)
4094T	105 mm (4.13 in.)	3.3 lbs (1.5 kg)	3.8 lbs (1.7 kg)
409-8T	114 mm (4.50 in.)	4.0 lbs (1.8 kg)	4.5 lbs (2.0 kg)
409-16T	124 mm (4.86 in.)	4.5 lbs (2.0 kg)	5.0 lbs (2.3 kg)
409-32T	137 mm (5.38 in.)	5.0 lbs (2.3 kg)	5.5 lbs (2.5 kg)

Finish:

Black

Electro-Voice®

Transformer Specifications

Frequency Response:

15700: ..... 100 Hz to 10 kHz, +/-1 dB

15704, 15708, 15716, 15732: ..... 50 Hz to 15 kHz, +/-1 dB

Insertion Loss:

15700: ..... 1.0 dB

15704, 15708, 15716, 15732: ..... 0.5 dB

Secondary Impedance: ..... 8 ohms (all)

Primary Impedances and Power Drawn, nominal 70v:

15700 15704	15708	15716	15732
10 kohm (0.5 W)	5 kohm (1.0 W)	2500 ohm (2.0 W)	1250 ohm (4.0 W)
5000 ohm (1.0 W)	2500 ohm (2.0 W)	1250 ohm (4.0 W)	625 ohm (8.0 W)
2500 ohm (2.0 W)	1250 ohm (4.0 W)	625 ohm (8.0 W)	312 ohm (16 W)
1250 ohm (4.0 W)	625 ohm (8.0 W)	312 ohm (16 W)	156 ohm (32 W)

409 Theile-Small Parameters

Free Air Resonance, fs: ..... 90 Hz

Equivalent Volume Compliance, Vas: ..... 0.61 $ft.^3$

Total Q, Qts: 1.54

Electrical Q, Qes: 1.78

Mechanical Q, Qms: 11.53

Volume Displacement, VD ..... 1.95 in^3

Reference Efficiency: 0.71%

Recommended Connections

The 405-8H is a nominal 8-ohm impedance loudspeaker with a 16-watt input capability. The 405-4T utilizes an 4-watt, 70.7-, 100-volt universal line-matching transformer with power taps ranging from 1 to 4 watts.

Recommended Enclosures and Baffles

The 405-8H, 405-4T are designed to fit on standard 4-inch ceiling speaker baffles. Additionally, these loudspeakers will accommodate the use of any standard back enclosure with a diameter of 5.5 inches or greater and a depth of at least 4.5 inches. Larger back volumes will increase the low-frequency output. The frequency response of a 405 in a typical 0.5-cubic-foot back enclosure is shown in Figure 1.

Mounting

The 405 may be front or rear mounted against either surface of its mounting flange and requires a 110-mm (4.35-in.) diameter cutout and a 120-mm (4.72-in.) bolt circle, as shown in Figure 7. Normal fasteners up to 5 mm (0.20 in.) will fit through the four holes in the frame. The 405 is designed for mounting on standard ceiling speaker baffles.

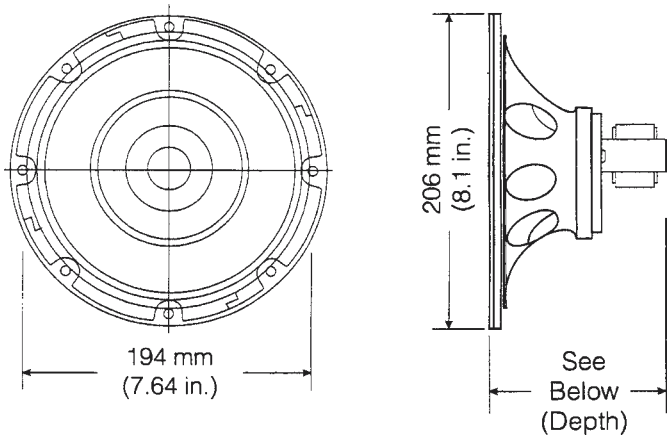

Dimensions

409-ST	25V	70V	100V
4.0W	Brown	Yellow	Green
2.0W	Red	Green	Blue
1.0W	Orange	Blue	Violet
0.5W	Yellow	Violet	N/A
Common	Black		
8 Ohms	White		
Common	Black		

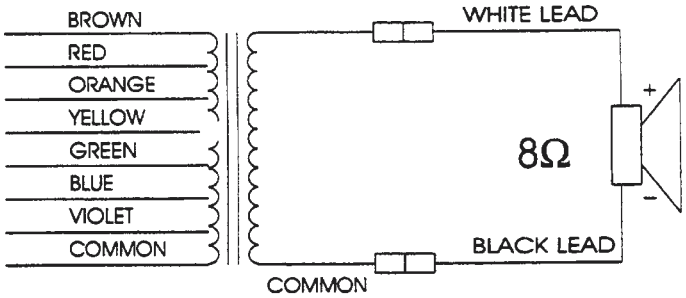

409-4T	409-8T	409-16T	409-32T	70V	100V
4.0W	**8.0W**	**16.0W**	**32.0W**	Brown	Red
2.0W	**4.0W**	**8.0W**	**16.0W**	Red	Orange
1.0W	**2.0W**	**4.0W**	**8.0W**	Orange	Yellow
0.5W	**1.0W**	**2.0W**	**4.0W**	Yellow	N/A
Common				Black	
8 Ohms				White	
Common				Black	

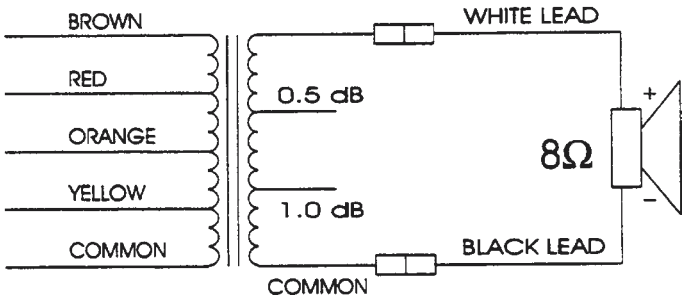

Wiring Diagam

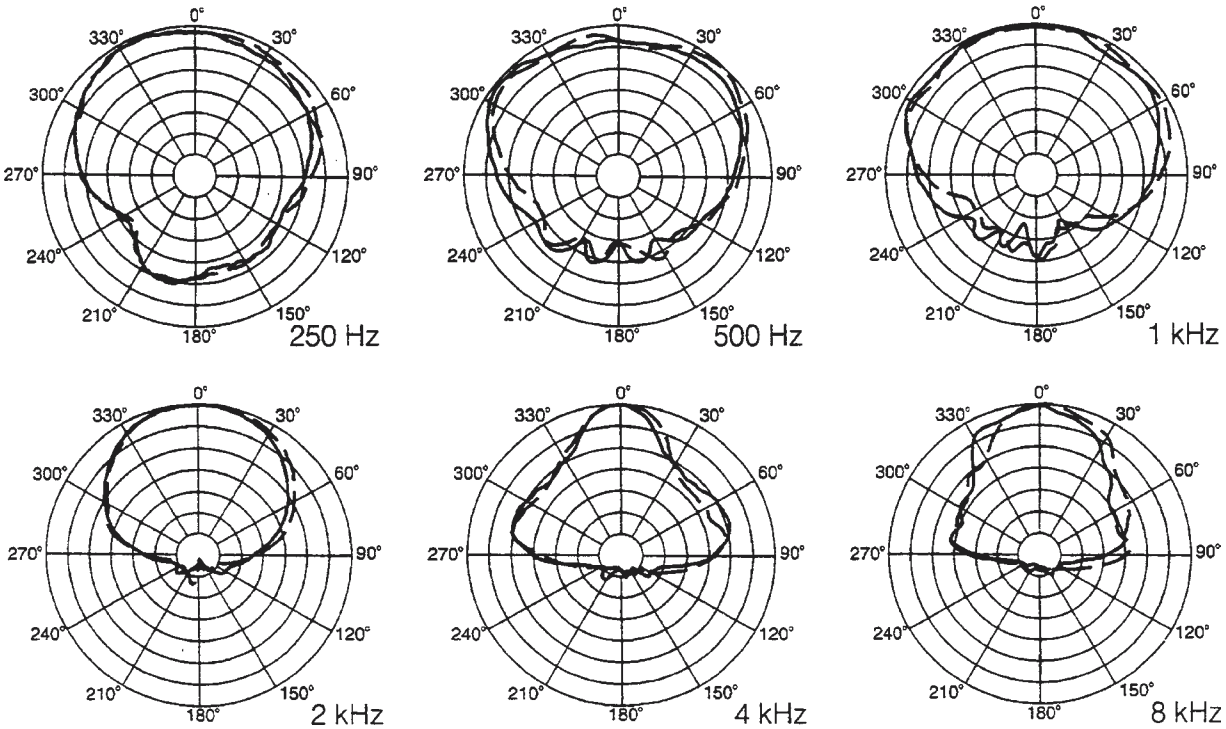

Polar Response Charts

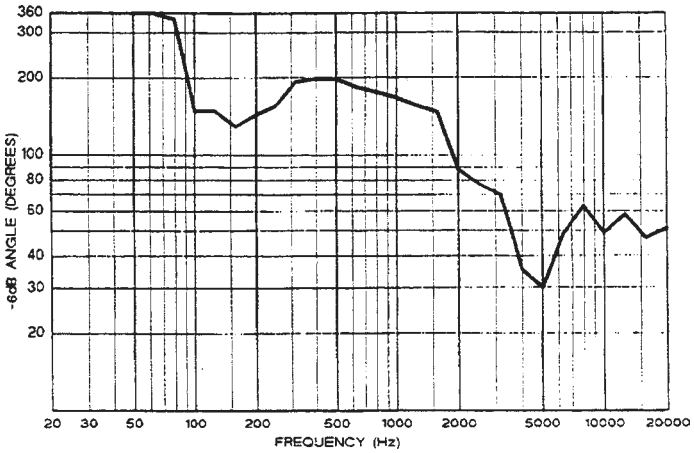

Impedance Response

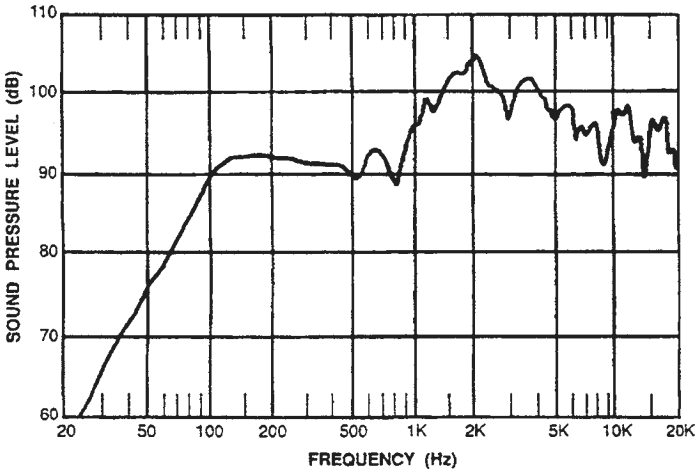

Frequency Response

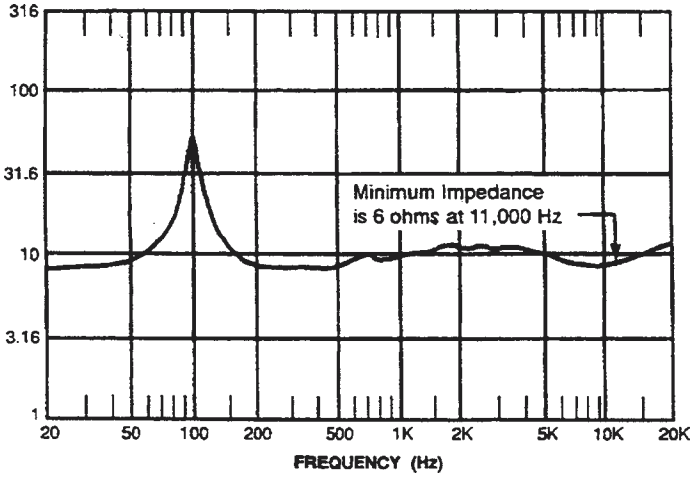

Beamwidth vs Frequency

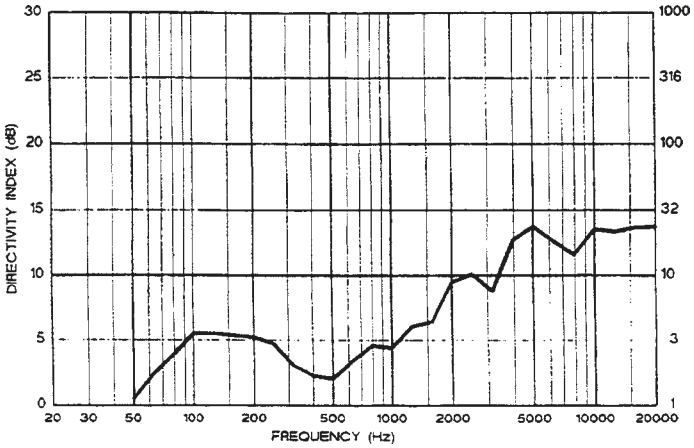

Directivity and Q

America:
USA: Telex Communications Inc. 12000 Portland Ave South, Burnsville, MN 55337, USA, Phone: 952-884-4051, Fax: 952-884-0043
Western Canada: PAG Canada. 23 Hawkesbury Crescent, Winnipeg, MB R3P-1Y6, Canada, Phone: 888-850-8811, Fax: 204-489-7614
Eastern Canada: PAG Canada. 728 Eglinton Ave. East, Toronto, ON M4G 2K7, Canada, Phone: 800-881-1685, 416-431-4975, Fax: 416-431-4588
Québec: Acoustik GE Inc. 5715 Kincourt, Montréal, PQ H4W 1Y7, Canada, Phone: 866-369-2864, 514-369-2864, Fax: 514-487-9525
Mexico: Telex Communications de Mexico. Parque Chapultepec 66-201, Naucalpan, Edo. Mex. 53390, Mexico, Phone: +52 555 358-5434, Fax: +52 555 358-5588
Latin America: Telex Communications Inc. 12000 Portland Ave South, Burnsville, MN 55337, USA, Phone: 952-887-7491, Fax: 952-887-9212
Europe:
Germany: Telex EVI Audio GmbH. Hirschberger Ring 45, D 94315, Straubing, Germany, Phone: +49 9421-706 0, Fax: +49 9421-706 265
France: EVI Audio France S.A. Parc de Courcerin, Allée Lech Walesa, F 77185 Lognes, France, Phone: +33 1-6480-0090, Fax: +33 1-6006-5103
UK: Telex Communications Ltd. 4, The Willows Centre, Willow Lane, Mitcham, Surrey CR4 4NX, UK, Phone: +44 208 646 7114, Fax: +44 208 640 7583

Africa & Middle-East: Telex EVI Audio GmbH. Hirschberger Ring 45, D 94315, Straubing, Germany, Phone: +49 9421-706 0, Fax: +49 9421-706 265
Asia & Pacific Rim:
Japan: EVI Audio Japan Ltd. 5-3-8 Funabashi, Setagaya-Ku, Tokyo, Japan 156-0055, Phone: +81 3-5316-5020, Fax: +81 3-5316-5031
Australia: EVI Audio (Aust) Pty Ltd. Slough Business Estate, Unit 23, Silverwater, N.S.W. 2128, Australia, Phone: +61 2-9648-3455, Fax: +61 2-9648-5585
China: EVI Audio (HK) Ltd. Unit E & F, 21F, Luk Hop Industrial Bldg., 8 Luk Hop St., San PO Kong, Kowloon, Phone: +852 2351-3628, Fax: +852 2351-3329
Singapore: Telex Pte. Ltd. 3015A Ubi Road 1, 05-10 Kampong Ubi Industrial Estate, Singapore 408705, Phone: +65 746-8760, Fax: +65 746-1206

www.electrovoice.com • Telex Communications, Inc. • www.telex.com

© Telex Communications, Inc. 2/2002

Part Number 38109-864 Rev B

Electro-Voice®

U.S.A. and Canada only.
For customer orders, contact the Customer Service department at
800/392-3497 Fax: 800/955-6831
For warranty repair or service information, contact the Service Repair department at 800/685-2606
For technical assistance, contact Technical Support at 866/78 AUDIO
Please refer to the Engineering Data Sheet for warranty information.
Specifications subject to change without notice.